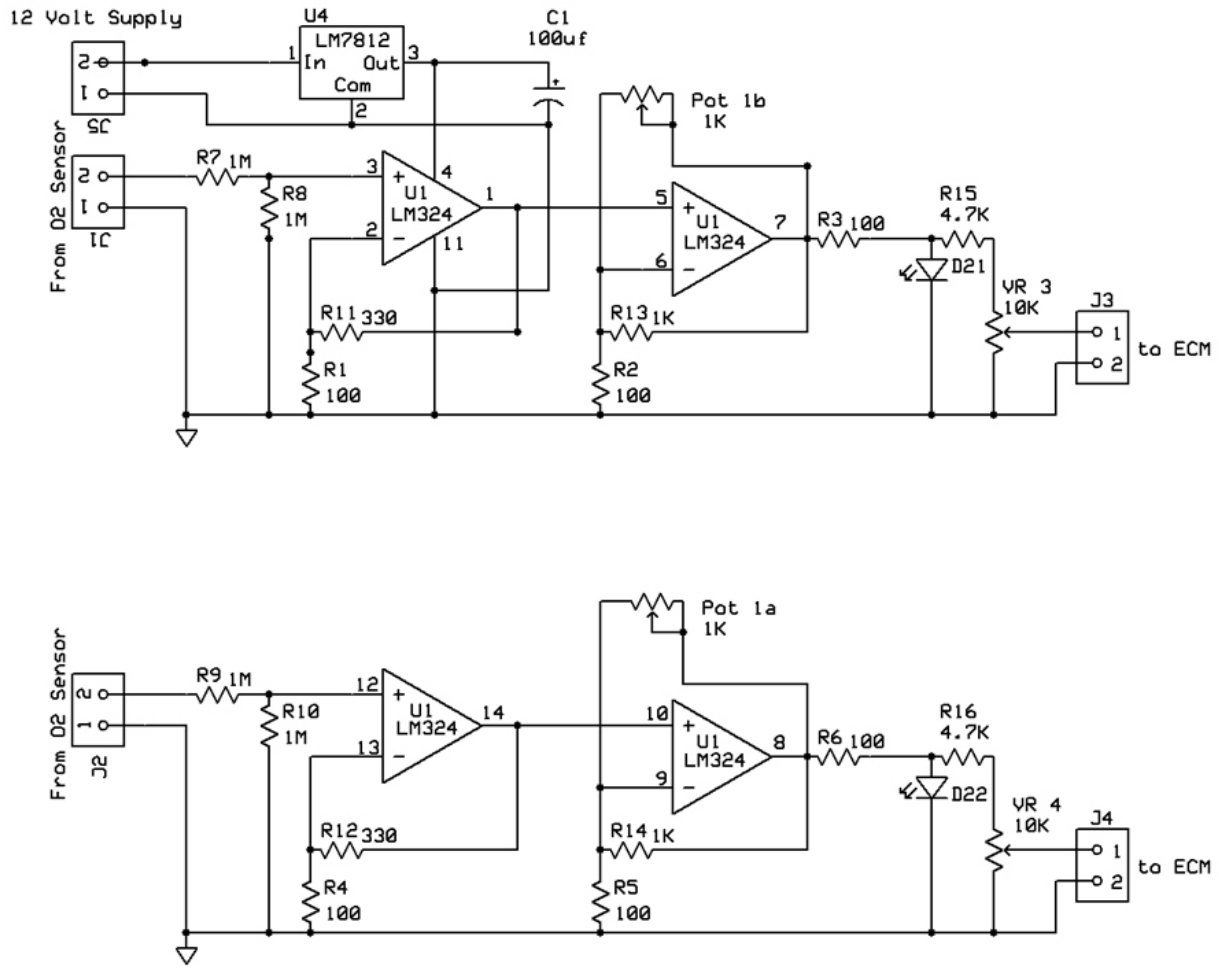

cabetcl		
Dual O2 Sensor / Control EFIE		
Claudio Cabete	Rev 1.0 4/29/2008	Page 1